RECOMMENDED SHAFT FIXTURE SHAPE

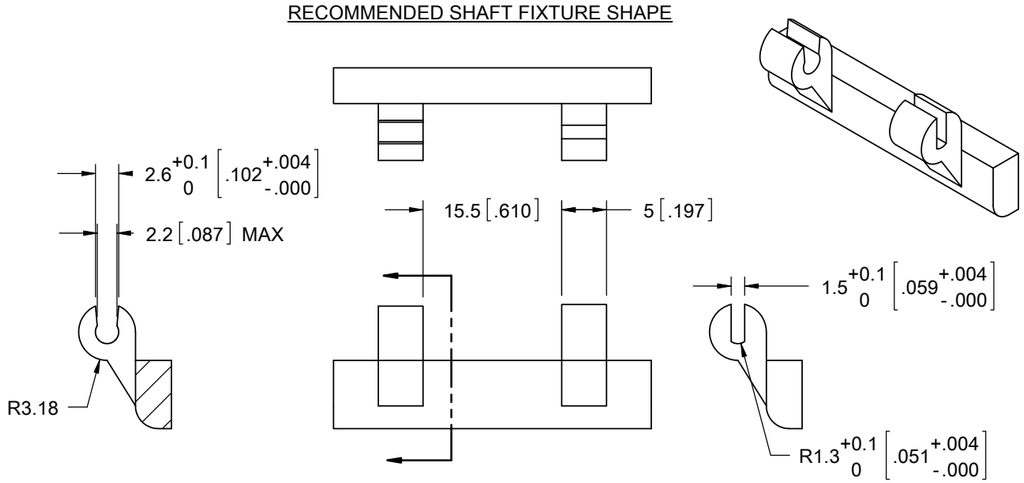

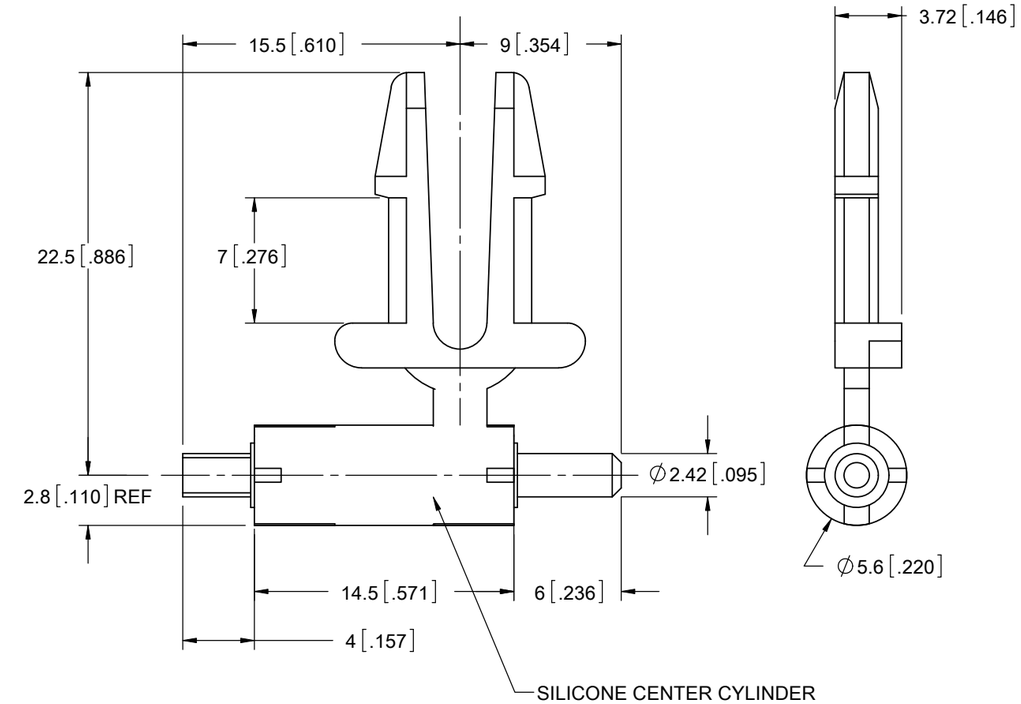

RECOMMENDED HOLE SHAPE

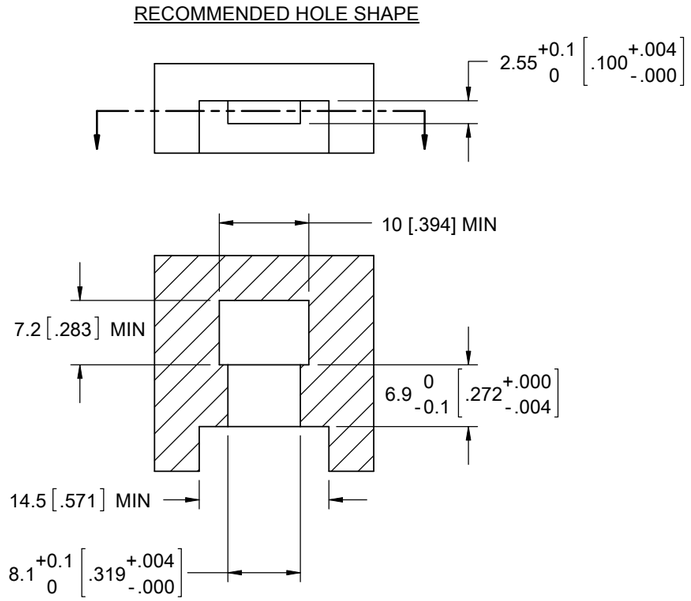

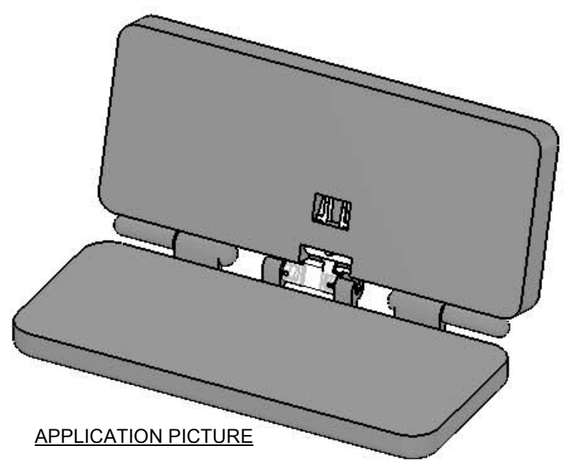

APPLICATION PICTURE

NOTES:
1. MATERIAL:
   THERMOPLASTIC: NYLON 6/6 UL94 V-2 (RMS-406) AND
   CENTER CYLINDER: LIQUID SILICONE RUBBER (RMS-407)
2. COLOR: BLACK PLASTIC AND NATURAL (TRANSLUCENT) ELASTOMER
3. DURABILITY: 50,000 CYCLES FROM 0° to 120°
4. TORQUE: 0.4 (gf*cm)/°
5. MAX. REVOLUTION ± 180°
6. PATENT PENDING

REV.	DESCRIPTION	ENGR.	DATE
A	RELEASED FOR PRODUCTION	S.J.	07.10.09

TITLE: AXIS SPRING				DWG IN IN [MM]
CREATED USING SOLIDWORKS	FILE #: AS-1		DWN: A.N.	APP: D.J.Z.	FINAL
TOLERANCES UNLESS NOTED 0~10=±0.1 10.01~30=±0.3 30.01~50=±0.5 ANG.=±1°	SHEET: 1 OF 1	SHEET SIZE: B	DT: 09.29.2008	CHKD: S.J.	PART # AS-1
	RE: RICHCO INC. --		RICHCO, INC. ENG@RICHCO-INC.COM (773) 539-4060		PRINT TYPE CA